Model	Speed Ratio	Screw Dia.	Screw Lead
RNK-20T	1/8 1/16 1/32	¢50	P=10

Nosen Mechanical&Electrical Equipment Co.,Ltd
Website: http://www.screwjack.com.cn
Tel: 86-769-85644651 86-13532664175
Fax: 86-769-85644652
Email: admin@screwjack.com.cn
MSN: nosen28@hotmail.com
Skype: joe19861216
ICQ: 595-074-712

Double Input
(standard type)

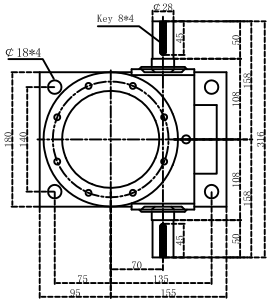

Light Loading Type

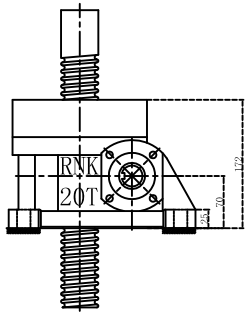

Heavy Loading Type

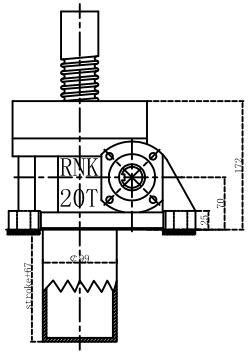

①Direct type
Double Input
Flanged Right Side

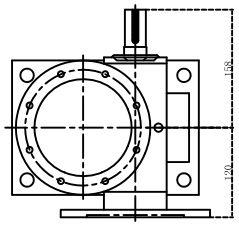

②Direct type
Single Input
Flanged Right Side

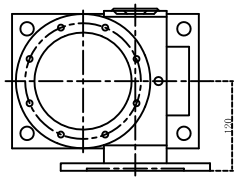

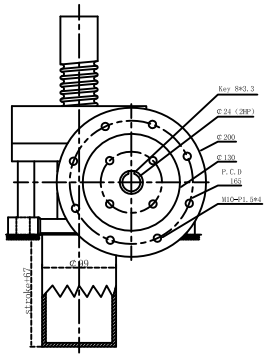

top end and allowance shortest sizes

S type (threaded end)

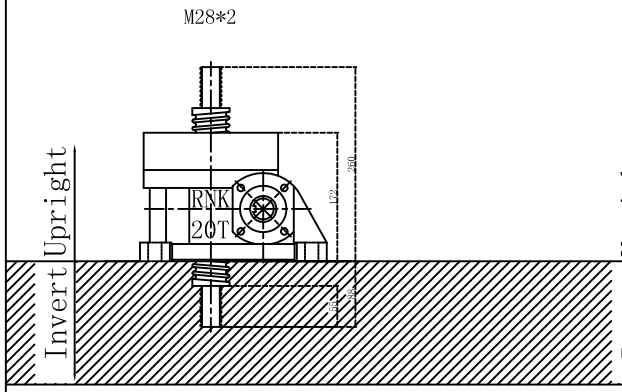

H type (clevis end)

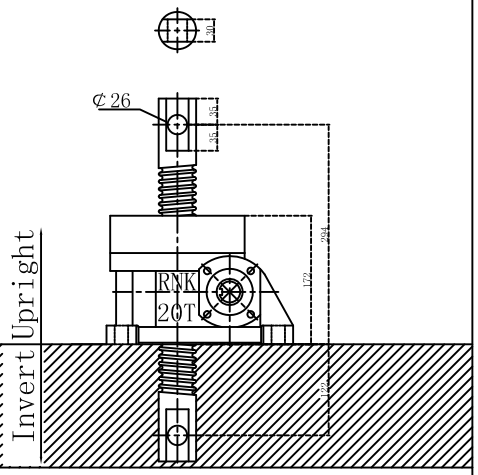

R type (plain end)

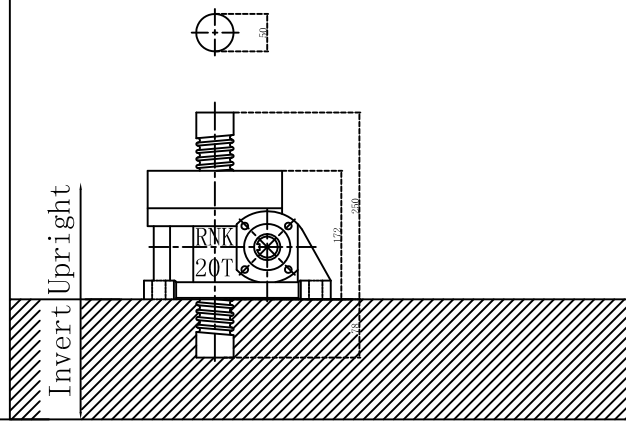
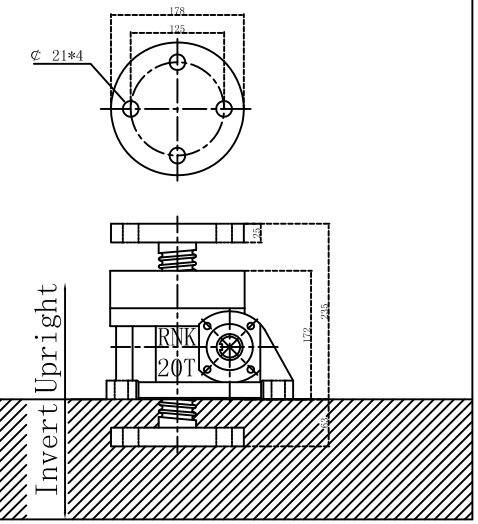
T type (top end)