Worm Gear Screw Jack

Model	Speed Ratio	Screw Dia.	Screw Pitch
RN-3T	1/6 1/12 1/24	¢32m/m	P=6

Nosen Mechanical&Electrical Equipment Co.,Ltd

ADD:Liangshuijing industrial park,Dajing,Houjie town,Dongguan city,Guangdong province,China
Tel: 86-769-85644651 13532664175
Fax: 86-769-85644652
NOSEN INT'L INDUSTRY(HK) LIMITED
ADD:Flat A,18/F,Kingswell Commercial Tower,171Lockhart Road,Wanchai,Hong Kong
Website: http://www.screwjack.com.cn Email: admin@screwjack.com.cn
MSN: nosen28@hotmail.com Skype: joe19861216

Double(Standard type) Input

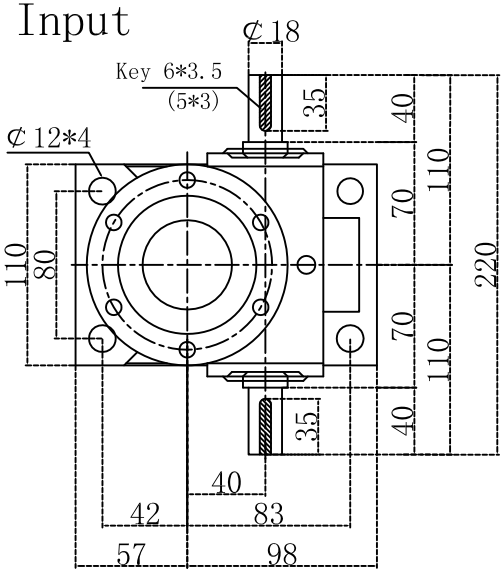

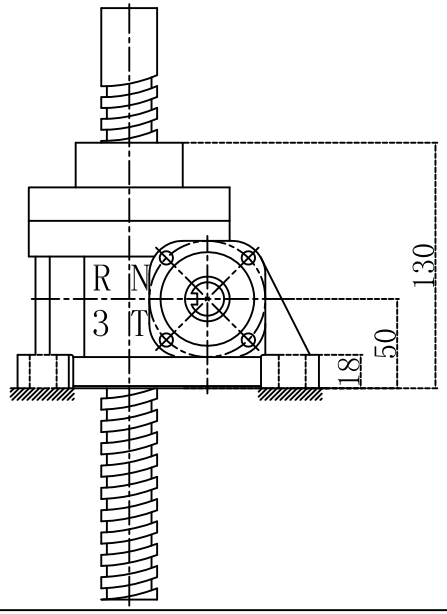

①Direct type

Double Input
Flanged Right Side

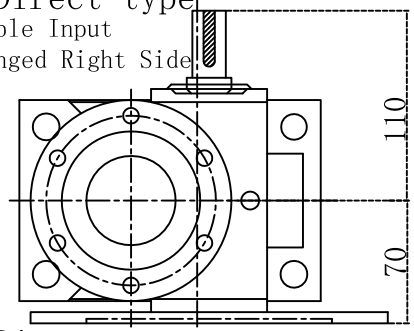

②Direct type

Single Input
Flanged Right Side

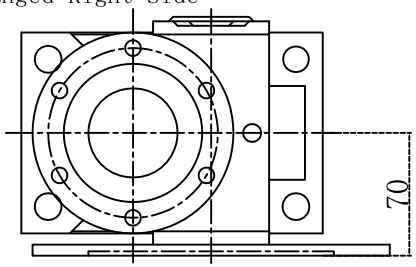

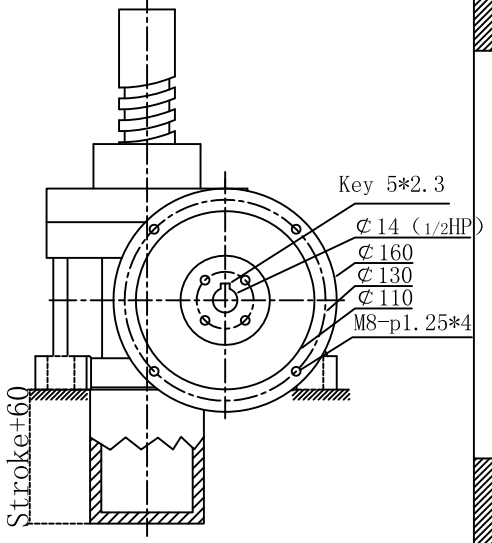

Screw top end and the shortest sizes

T type
(screw top plate)

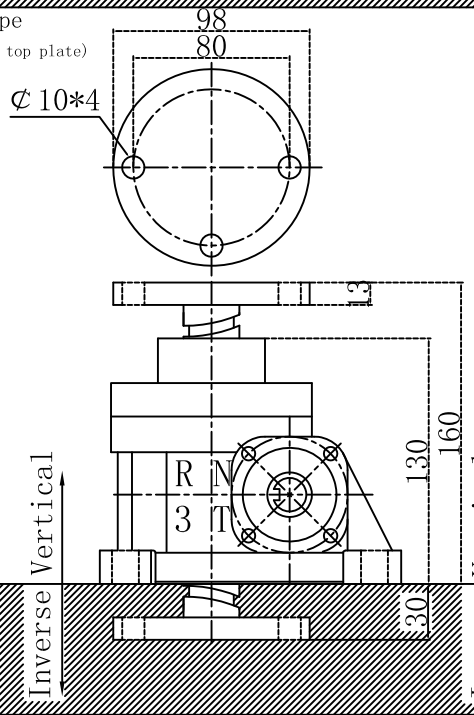

H type
(clevis end)

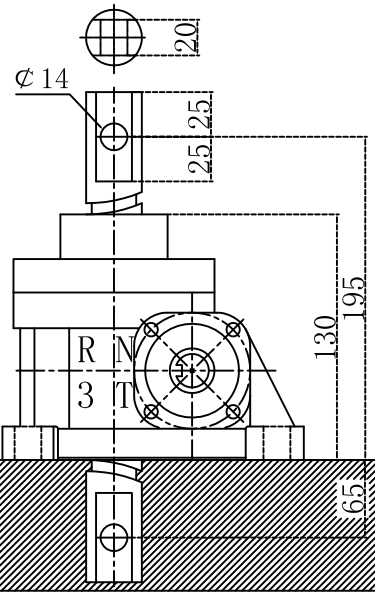

R type
(plain diameter end)

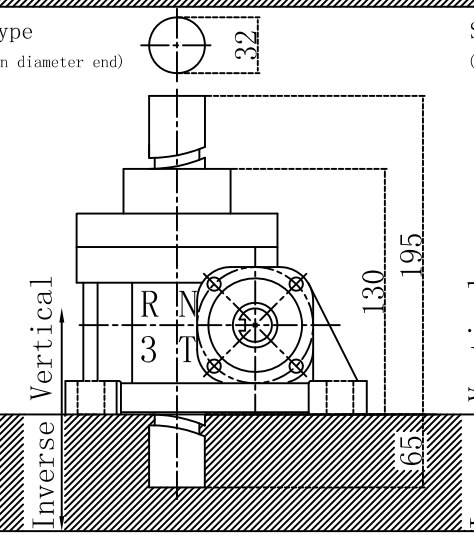
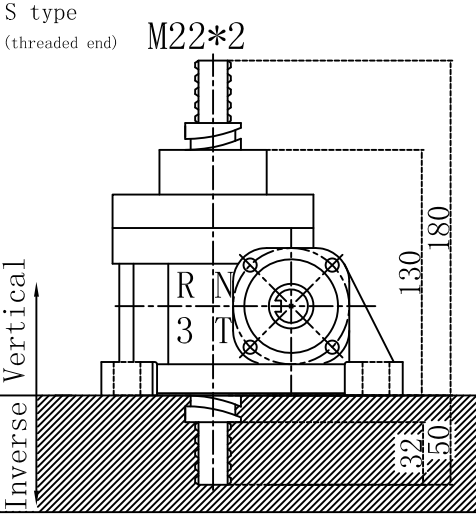
S type
(threaded end)